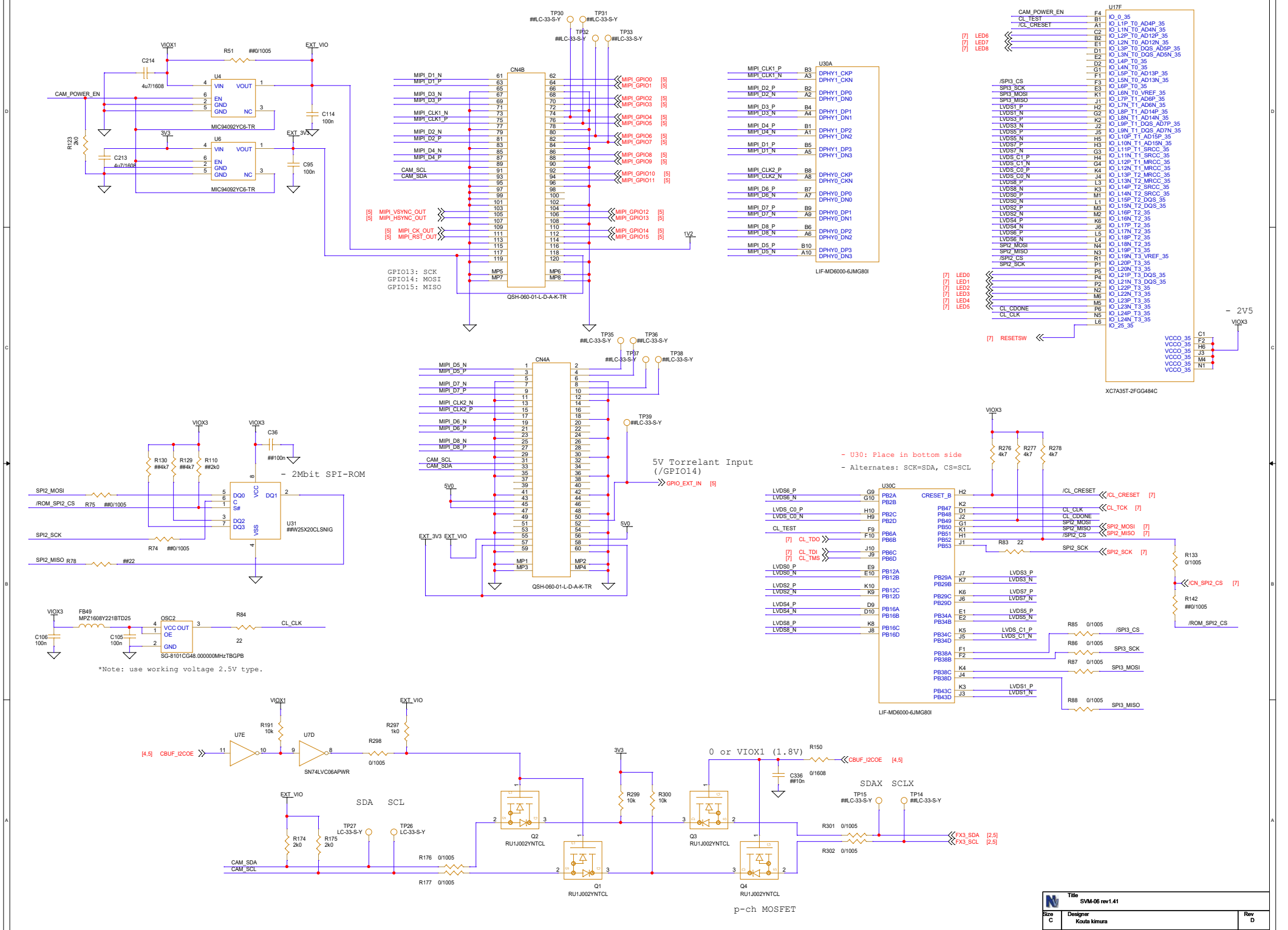


| | | | |
|---|---|---|---|
| Title | SVM-06 rev1.41 | | |
| Size C | Designer Kouta kimura | | Rev D |
| Date: Thursday, July 25, 2024 | Sheet 4 of 9 | | |